Engineering Release Notice (ERN)	Location	Change description A=Added M=Modified	P/A	Document release status
			D 1 . 6+ . main	RELEASED
				Date / Modification count

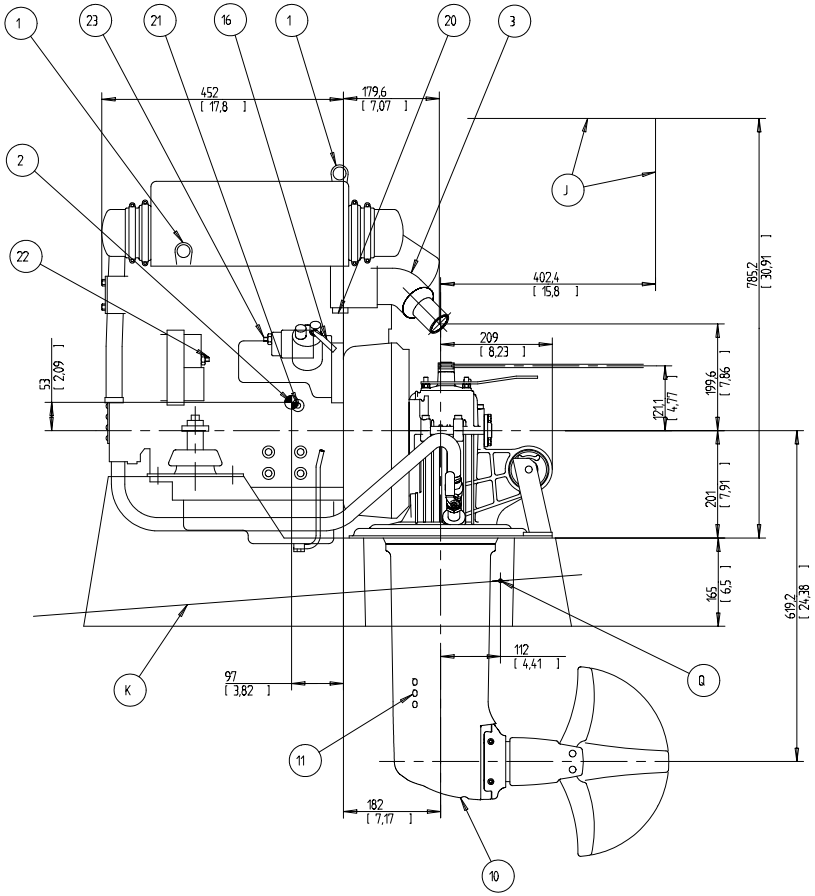

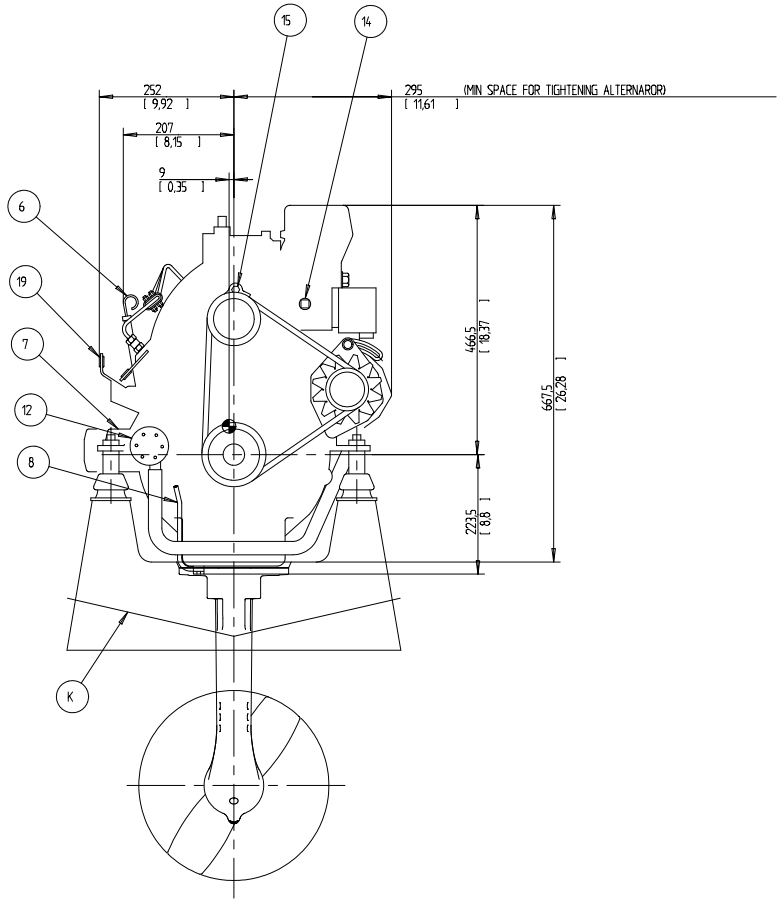

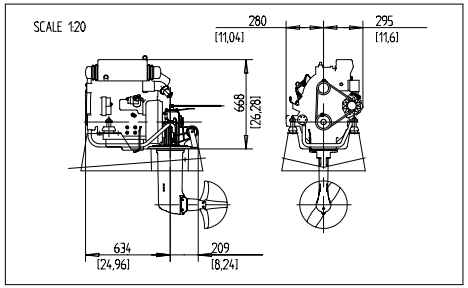

J MIN. SPACE WHEN MOUNTING DRIVE UNIT

K LOWER EDGE TO BE CUT ACC. TO HULL FORM

Q REF. POINT. SEE INSTALLATION HANDBOOK

1 LIFTING DEVICE

2 CENTRE OF GRAVITY

3 EXHAUST ELBOW FOR HOSE I.D 44 [1,75]

4 AIR FILTER

5 OIL FILLING, ENGINE

6 OIL DIPSTICK, ENGINE

7 OIL FILTER, ENGINE

8 OIL DRAIN (WITH PUMP) ENGINE Φ10

9 OIL DIPSTICK / OIL FILL CAP, DRIVE

10 OIL DRAIN, DRIVE

11 WATER INLET, DRIVE

12 SEA WATER PUMP

13 WATER FILLER CAP FRESH WATER

14 HEAT WATER OUTLET

15 HEAT WATER INLET

16 FUEL CONNECTION FOR HOSE I.D 9(3/8)

17 FUEL RETURN CONNECTION FOR HOSE I.D 9(3/8)

18 FUEL FILTER

19 SPEED CONTROL LEVER

20 CONNECTING BOX FOR EXTENSION CABLE

21 BATTERY MINUS (-) CONNECTION

22 PLUS (+) CONNECTION FOR CHARGING DISTRIBUTOR

23 STARTER BATTERY PLUS (+) CONNECTION

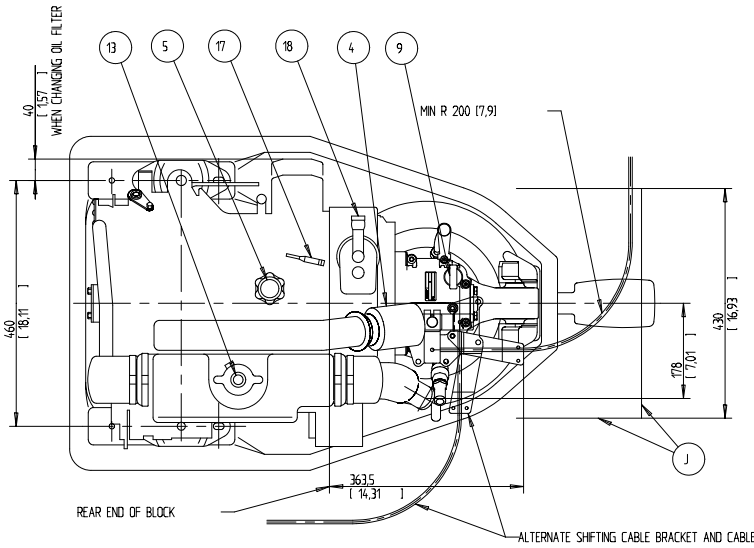

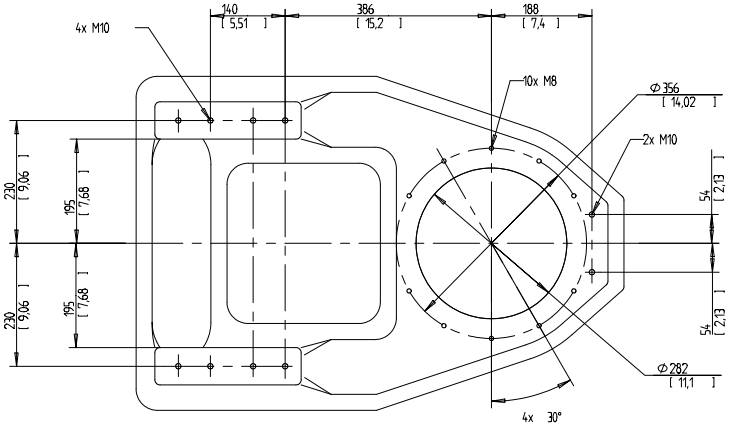

ENGINE BED

DIMENSION IN MILLIMETRES AND INCHES WITHIN [ ]

SCALE 1:5

SYMBOLS, DESIGNATIONS AND GENERAL DRAWING METHODS STD 50235011

The copying, distribution and utilization as well as the communication of the contents of this document without express authorization is prohibited. Offenders are liable for payment of damages. All rights are reserved in the event of the grant of a patent or ornamental design registration.

VOLVO PENTA

Document title: INSTALLATION DRAWING MD2040-D / 130S

Document type: DIMENSIONS DRAWING

Owner domain/Document prefix

Document no: 3591340 | Issue index: 01 | Sheet no: 1 (1)