Approved	Change approved	P/R	RELEASED
Checked	Checked	B 1.5 : 888	

- (A) WATER FILLER CAP, FRESH WATER
- (B) OIL FILLER CAP, ENGINE
- (C) OIL DIPSTICK, ENGINE LEFT OR RIGHT SIDE MOUNTED
- (D) ENGINE CONTROL UNIT
- (E) OIL DRAIN (WITH PIPE), ENGINE Ø12.5
- (F) OIL FILTER MAIN
- (G) OIL FILTER BYPASS
- (H) LIFTING EYE
- (I) WATER DRAIN, FRESH WATER
- (J) WATER DRAIN, SEA WATER
- (K) AIR FILTER
- (L) FUEL FILTER
- (M) HOT WATER OUTLET Ø16
- (N) HOT WATER INLET Ø16
- (P) STRAINER SEA WATER
- (Q) OIL DIPSTICK DRIVE (UNDER COVER)
- (R) CENTRE OF GRAVITY
- (S) WATER INLET DRIVE
- (T) OIL DRAIN DRIVE (BEHIND ADAPTER)
- (U) FUEL INLET CONNECTION Ø10
- (V) FUEL RETURN TO TANK Ø10
- (X) ENGINE STOP
- (Y) CRANKCASE VENTILATION
- (Z) EXHAUST RISER Ø127 (5"(OPTION)
- (AA) X-MESUREMENT SEE 7742299-6
- (AB) TIE BAR (TWIN INSTALLATION)
- (AC) EXTRA ALTERNATOR (OPTION)
- (AD) SEA WATER PUMP

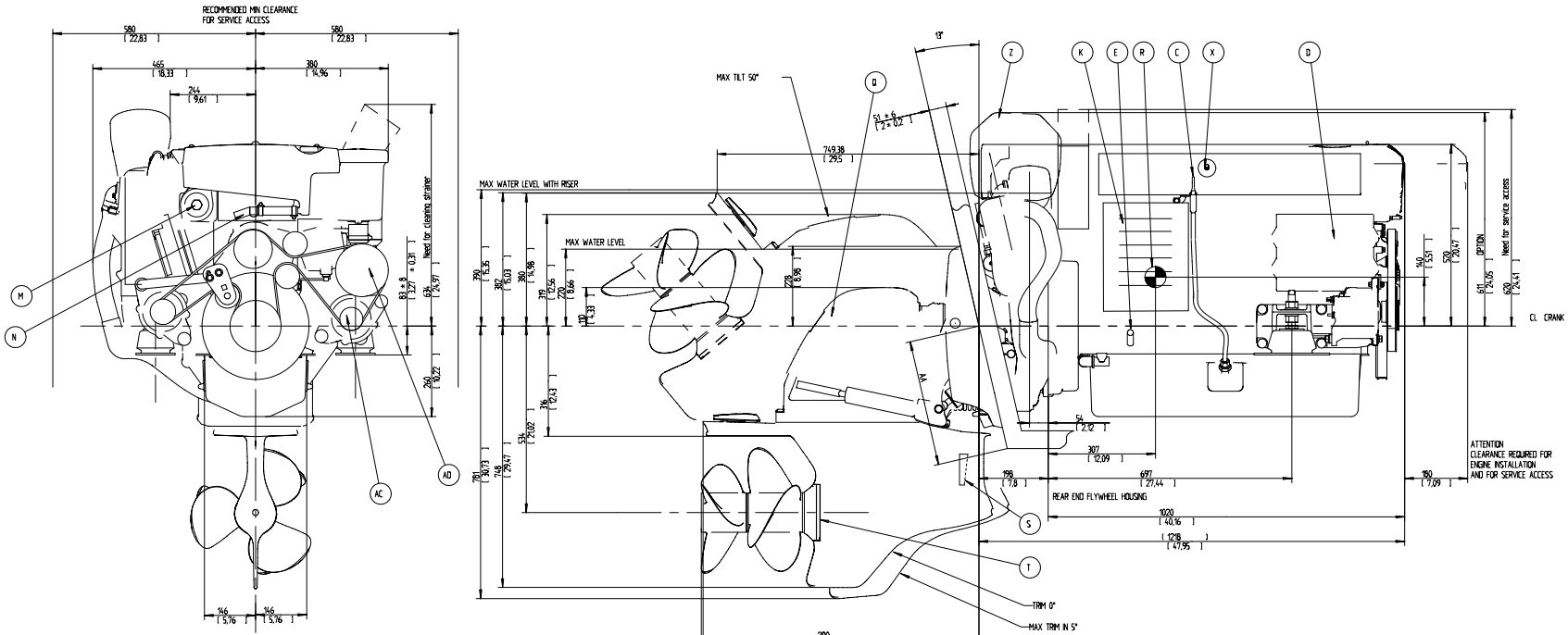

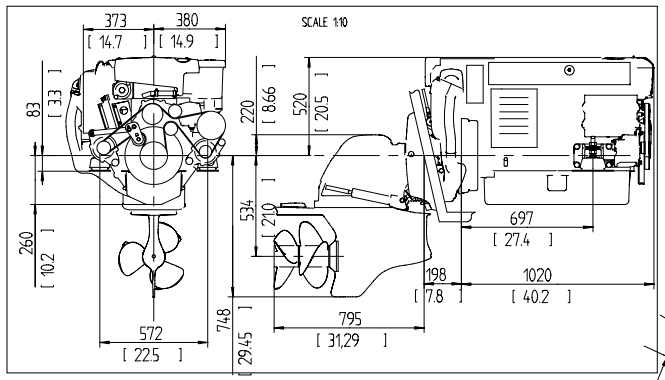

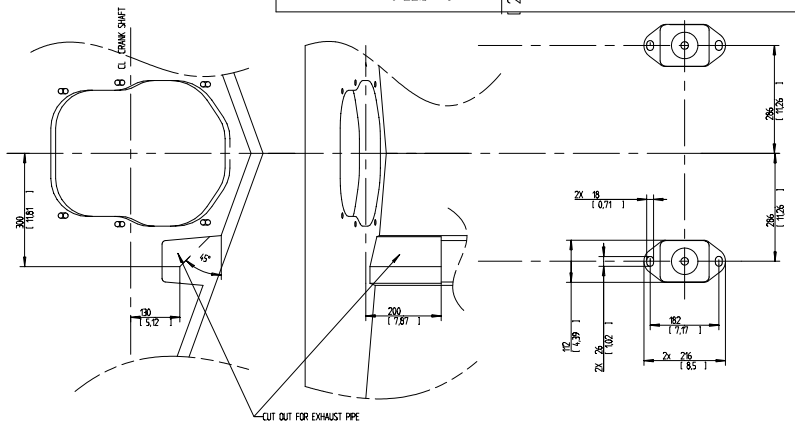

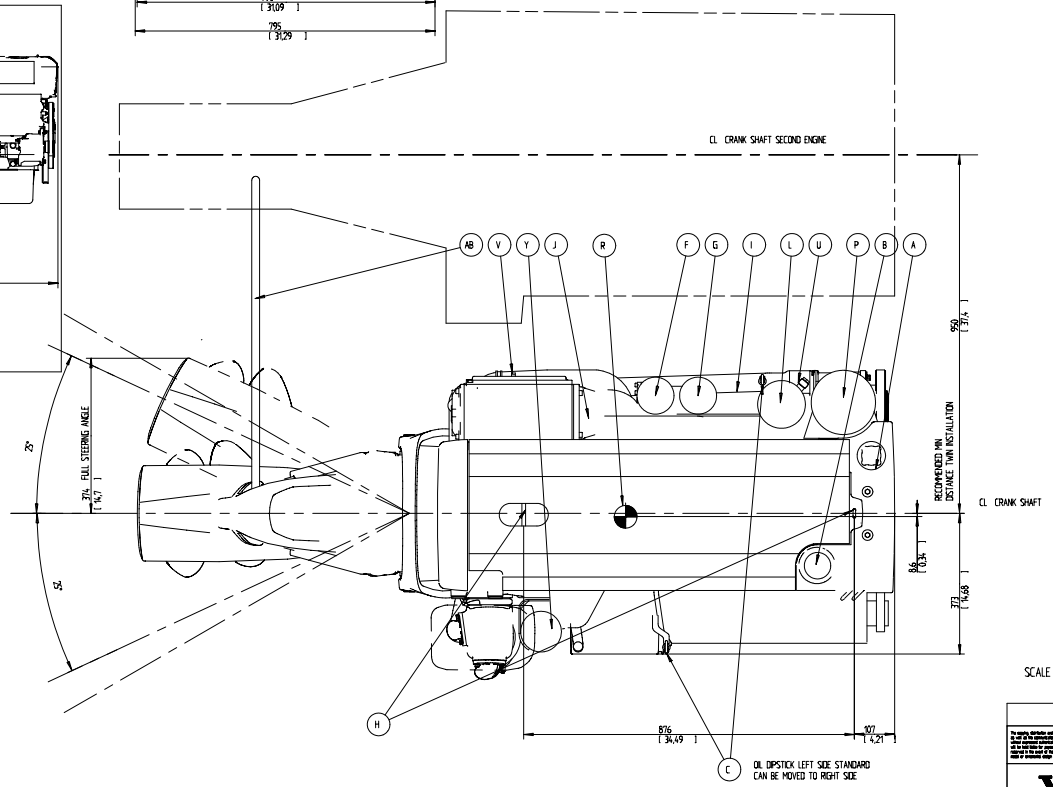

SCALE 15

SYMBOLS, DESIGNATIONS AND GENERAL DRAWING METHODS STD 99-0005 AND STD 1007003		
Drawing title: ENGINE DIMENSIONS D6 / AQ-DRIVE DP-R		
Drawing type: DIMENSION DRAWING		
Drawing no: 3591359	Issue index: 01	Sheet no: 1/1

VOLVO PENTA