Drawn		P/R	RELEASED
Checked		0 1 . 7 . 2008	

- (A) WATER FILLER CAP, FRESH WATER
- (B) OIL FILLER CAP, ENGINE
- (C) OIL DIP STICK, ENGINE LEFT OR RIGHT SIDE MOUNTED
- (D) ECU CONTROL UNIT
- (E) OIL DRAIN (WITH PIPE), ENGINE Ø12.5
- (F) OIL FILTER MAIN
- (G) OIL FILTER BYPASS
- (H) LIFTING EYE
- (I) WATER DRAIN, FRESH WATER
- (J) WATER DRAIN, SEA WATER
- (K) AIR FILTER
- (L) FUEL FILTER
- (M) HOT WATER OUTLET Ø16
- (N) HOT WATER INLET Ø16
- (P) STRAINER SEA WATER
- (Q) OIL DIP STICK DRIVE (UNDER COVER)
- (R) CENTRE OF GRAVITY
- (S) WATER INLET DRIVE
- (T) OIL DRAIN DRIVE (BEHIND ADAPTER)
- (U) FUEL INLET CONNECTION Ø10
- (V) FUEL RETURN TO TANK Ø10
- (X) ENGINE STOP
- (Y) CRANK CASE VENTILATION
- (Z) EXHAUST RISER Ø127 (5"(OPTION)
- (AA) X-MESUREMENT SEE 7742299-6
- (AB) TIE BAR (TWIN INSTALLATION)
- (AC) EXTRA ALTERNATOR (OPTION)
- (AD) SEA WATER PUMP

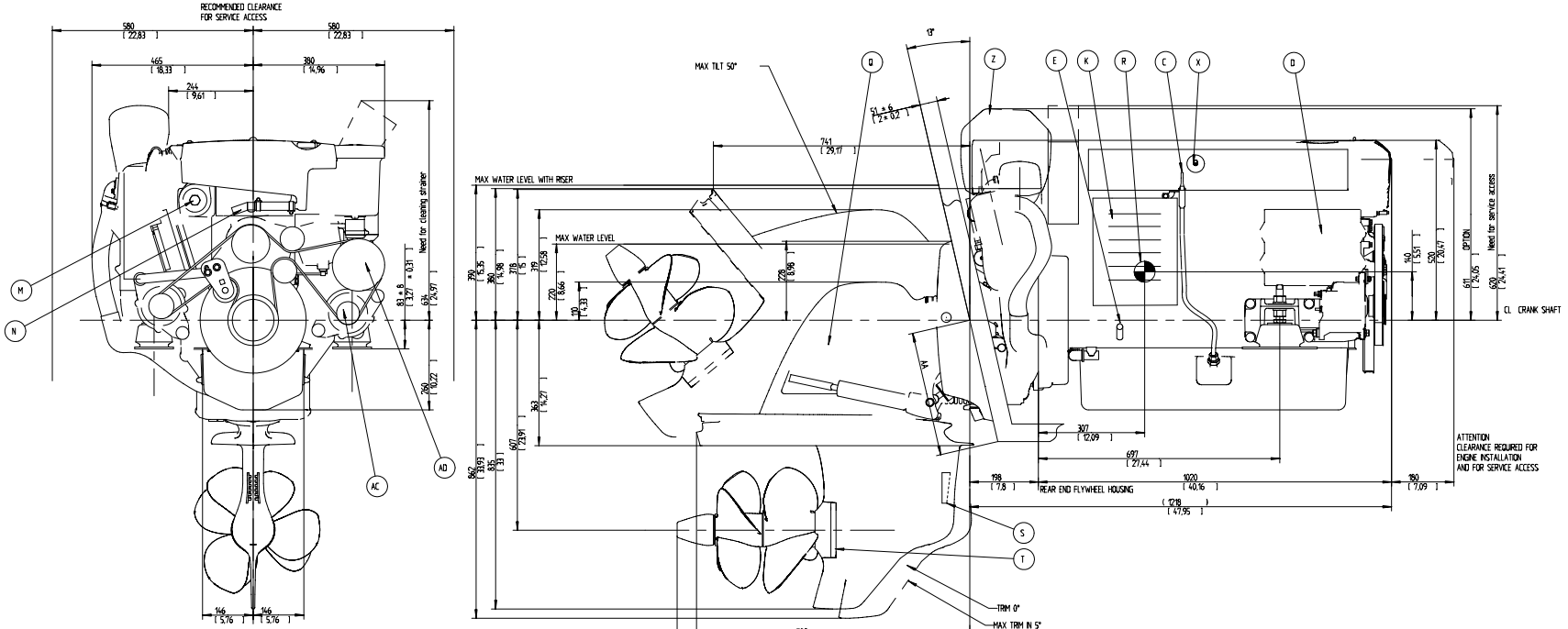

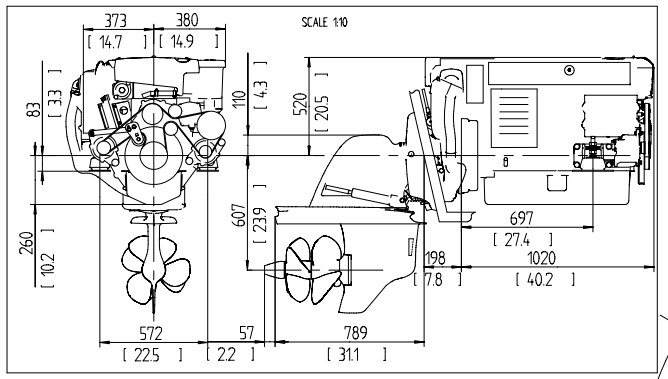

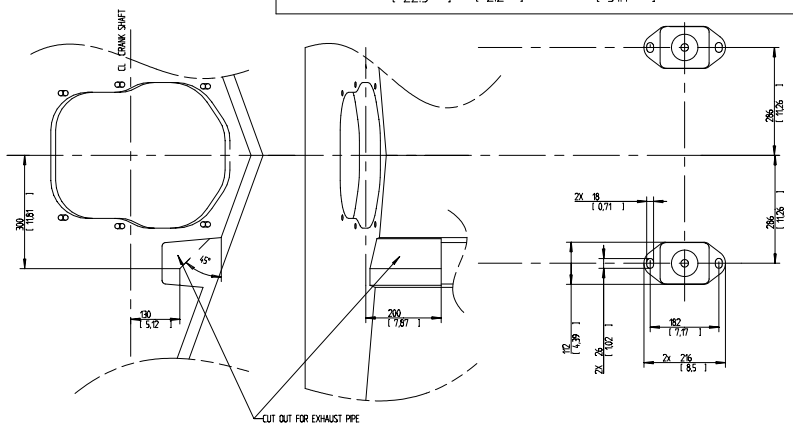

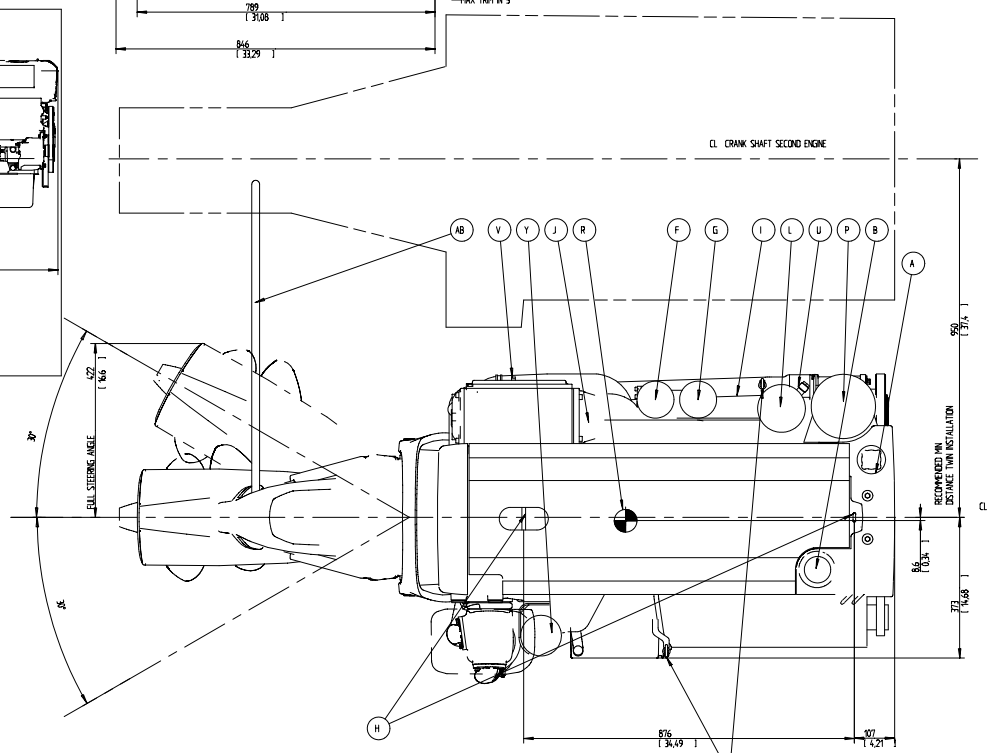

SCALE 15

The ownership, distribution and utilization of this document as well as the communication of its contents to others without express authorization is prohibited. Offenders will be held liable for the payment of damages. All rights are reserved in the event of the grant of a patent, utility model or ornamental design registration.	SYMBOLS, DESIGNATIONS AND GENERAL DRAWING METHODS STD 191-0005 AND STD 1007003	
	Drawn for: ENGINE DIMENSIONS D6 / AQ-DRIVE DP-H	
VOLVO PENTA	Drawn for: DIMENSION DRAWING	
	Drawn by: 3591358	Sheet No: 01 / Total No: 1/1