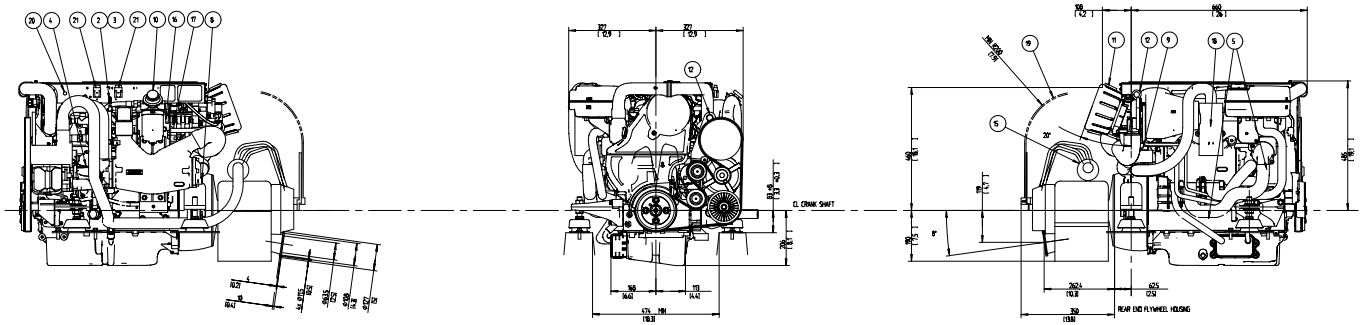

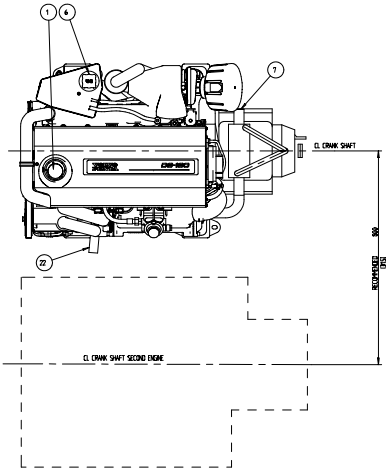

ECU UNIT

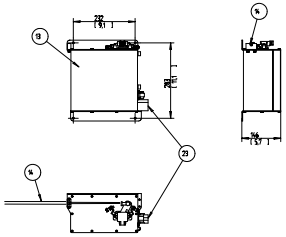

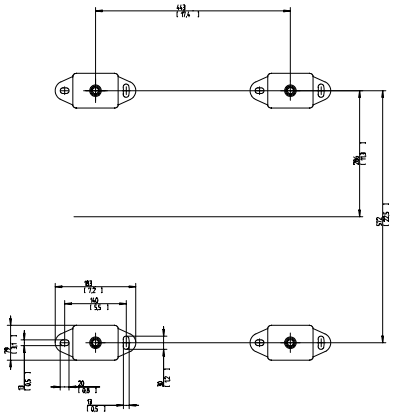

1. OIL FILLER CAP, ENGINE
2. OIL DIP STICK, ENGINE
3. OIL DRAIN (WITH PUMP), ENGINE
4. OIL FILTER
5. WATER DRAIN, FRESH WATER
6. WATER FILLER CAP, FRESH WATER
7. WATER INLET, SEA WATER I.D. 32, 1.25"
8. WATER DRAIN CHARGE AIR COOLER, SEA WATER
9. WATER DRAIN HEAT EXCHANGER, SEAWATER
10. FUEL FILTER
11. AIR FILTER
12. LIFTING DEVICE #121, 0.69"
13. ECU UNIT (BOAT MOUNTED)
14. THROTTLE CABLE ATTACHMENT
15. OIL COOLER, REVERSE GEAR
16. FUEL CONNECTION FOR HOSE I.D. 9.5 (3/8")
17. FUEL RETURN CONNECTION FOR HOSE I.D. 9.5 (3/8")
18. EXHAUST ELBOW FOR HOSE I.D. 89, 35"
19. GEAR CONTROL CABLE
20. AUX. STOP
21. FUSE
22. ECU CABLE HARNESS
23. ECU HARNESS CONNECTION

SCALE 1:5

The ideas, details and drawings on this document are the property of AB VOLVO PENTA and may not be copied or disclosed without written consent from AB VOLVO PENTA. Violation of this clause will be prosecuted according to the Swedish Copyright Act.

VOLVO PENTA

ENGINE INSTALLATION
D3-H525A

INSTALLATION DRAWING

Drawing No: 359245
Version: 01
Sheet No: 1/3

RELEASED