(A)	WATER FILLER CAP FRESH WATER
(B)	OIL FILLER CAP, ENGINE
(C)	OIL DIP STICK, ENGINE
(E)	OIL DRAIN (WITH PUMP), ENGINE
(F)	OIL FILTER
(G)	LIFTING DEVICE
(H)	WATER DRAIN, FRESH WATER
(I)	WATER DRAIN, SEA WATER
(J)	AIR FILTER
(K)	FUEL FILTER
(L)	HEAT WATER OUTLET COMPRESSION SIDE 1/2-14 NPSF
(M)	HEAT WATER OUTLET LOW SIDE 1/2-14 NPSF
(O)	CONNECTION BOX
(P)	FILTER SEA WATER
(R)	OIL DIP STICK OUTBOARD DRIVE
(S)	OIL FILTER OUTBOARD DRIVE
(T)	CENTRE OF GRAVITY
(U)	WATER INLET
(V)	OIL DRAIN OUTBOARD DRIVE
X	SEE DWG 7735213

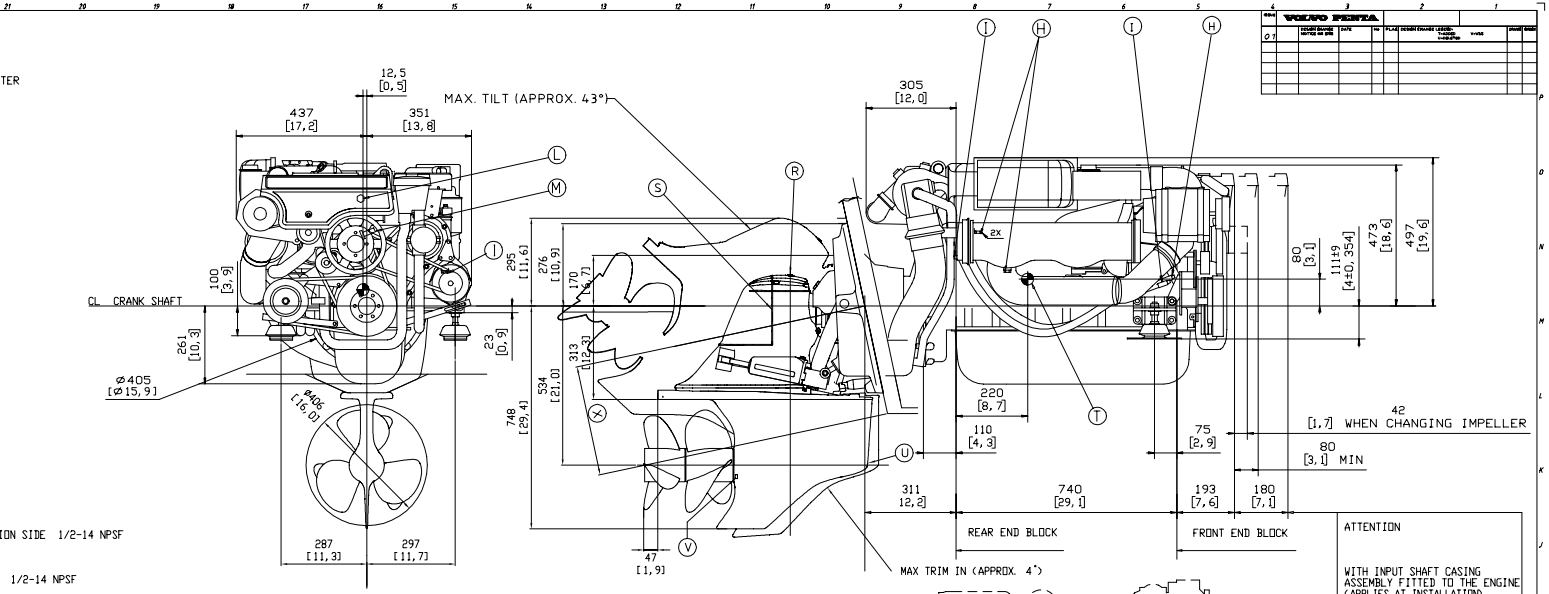

ATTENTION

WITH INPUT SHAFT CASING ASSEMBLY FITTED TO THE ENGINE (APPLIES AT INSTALLATION)

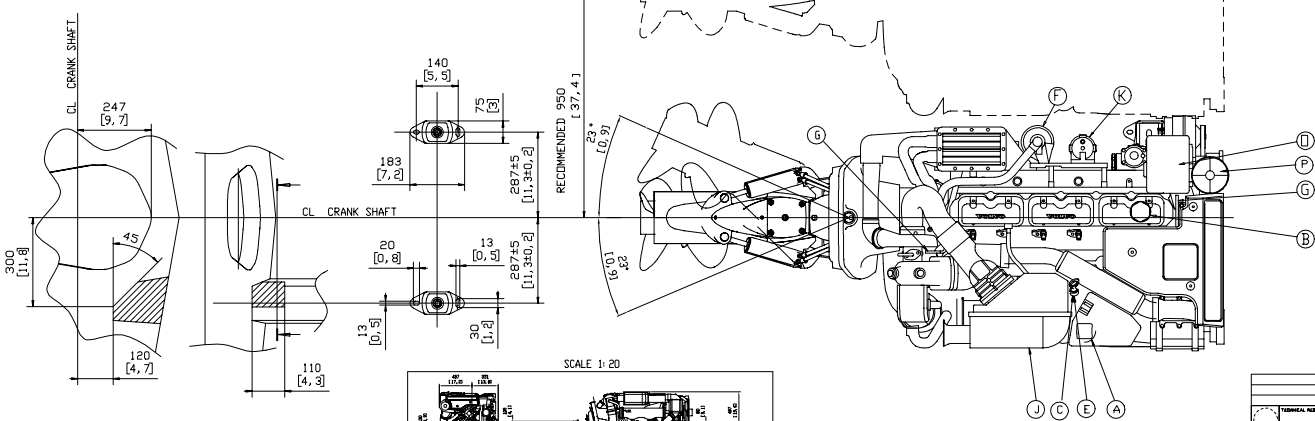

SCALE 1:20

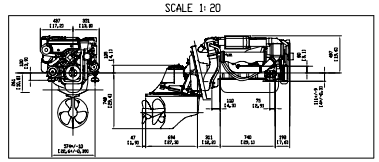

DIMENSION IN MILLIMETRES AND INCHES

TECHNICAL REGULATION	SYMBOLS, DESIGNATIONS AND STD. GENERAL DRAWING METHODS S.S.S.501
	AB Volvo Penta
MATERIAL	FIRST ANGLE PROJECTION
	INSTALLATION DRAWING
	KAD43P/DPX A
	3590614
	01