DENNA RITNING ÄR VOLVO PENTAS EGENDOM. SKYDDAD ENLIGT GÄLLANDE LAG
THIS DRAWING IS THE PROPERTY OF VOLVO PENTA. PROTECTED IN
ACCORDANCE WITH PREVAILING LAW

CAD CV

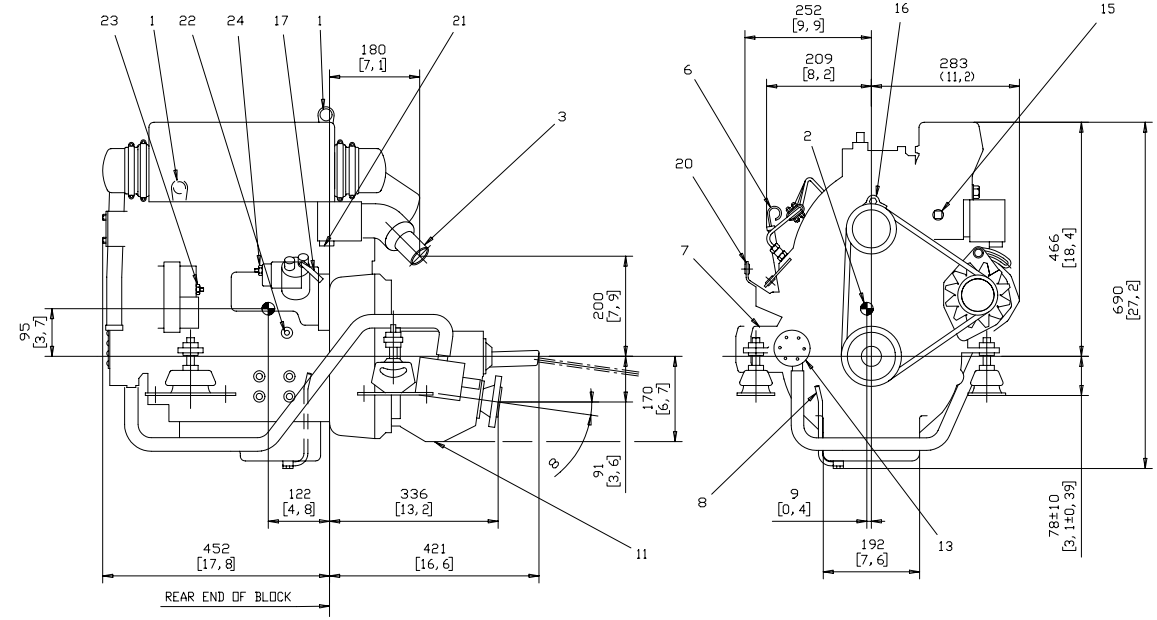

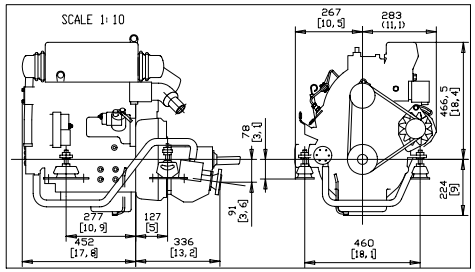

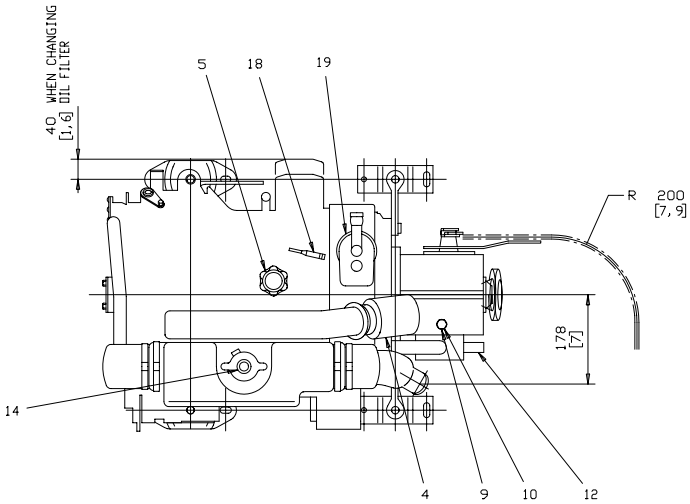

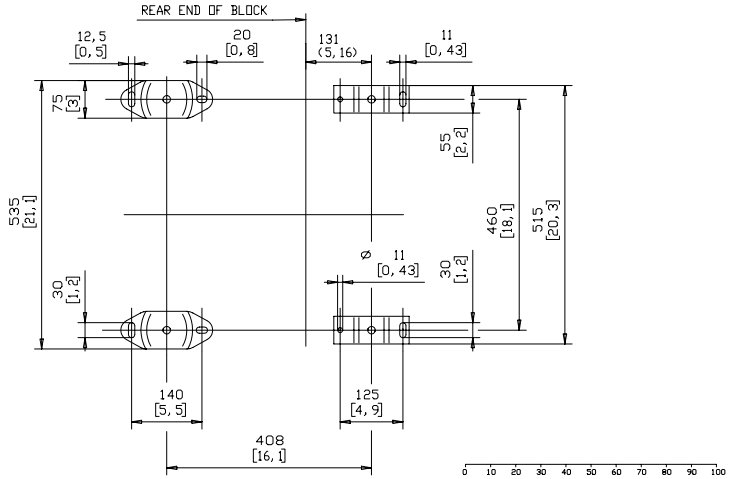

0 10 20 30 40 50 60 70 80 90 100

1. LIFTING DEVICE
2. CENTRE OF GRAVITY
3. EXHAUST ELBOW FOR HOSE I.D 44(1,75)
4. AIR FILTER
5. OIL FILLING
6. OIL DIPSTICK ENGINE
7. OIL FILTER
8. OIL DRAIN (WITH PUMP) ENGINE
9. OIL DIPSTICK REVERSE GEAR
10. OIL FILLER CAP REVERSE GEAR
11. OIL DRAIN REVERSE GEAR
12. WATER INLET FOR HOSE I.D 19(0,75)
13. SEA WATER PUMP
14. WATER FILLER CAP FRESH WATER
15. HEATWATEROUTLET
16. HEATWATERINLET
17. FUEL CONNECTION FOR HOSE I.D 9(3/8)
18. FUEL RETURN CONNECTION FOR HOSE I.D 9(3/8)
19. FUEL FILTER
20. SPEED CONTROL LEVER
21. CONNECTING BOX FOR EXTENSION CABLE
22. BATTERY MINUS (-) CONNECTION
23. PLUS (+) CONNECTION FOR CHARGING DISTRIBUTOR
24. STARTER BATTERY PLUS (+) CONNECTION

DIMENSION IN MILLIMETRES AND INCHES

VOLVO PENTA

DIMENSION DWG

RITN. NR/ DRAWING NO 3590390

SKALA SCALE	1 : 5		TYP TYPE	2040-D / MS15A
RITAD DRAWN	MR	991217	RITN. NR. DRAWING NO.	3590390
GRANSKAD CHECKED			BLAD/ SHEET	UTGÅVA/ ISSUE 01
GODKÄND APPROVED				

FORMAT A1